SPEAKER SYSTEM

SKS-4700

Instruction Manual

Thank you for your purchase of the Onkyo speaker system.
Please read this manual thoroughly before using it.
Following the instructions in this manual will enable you to obtain optimum performance and listening enjoyment from your new speaker system.
Please retain this manual for future reference.

Before using this unit

- The speaker cabinet is made of wood and is therefore sensitive to extreme temperatures and humidity. Avoid placing the speaker systems in locations subjected to direct sunlight, or in smoky or in humid places, such as near an air conditioner, humidifier, bathroom, or kitchen. Doing so may result in damage to the speaker.
- Place the unit on a rigid, level surface. Placing it on a slanted surface or weak base not only may cause the unit to fall, but also results in decreased sound quality.
- Be sure to turn off your amplifier before connecting the speaker system. Connecting them with the amplifier's power on may result in damage to the amplifier or the speaker system.
- Keep water or other liquids away from the unit. If water is spilled into the unit, not only the unit but also the speakers themselves may be damaged.

Precaution on use

- This speaker system can handle the specified input power when it is used for ordinary music reproduction. If the following abnormal signals are fed to the speaker, however, an overcurrent may flow in the internal circuits, causing burning or breakage of the wires even if the input power is below the specified rating.
  1. Noise produced when FM station is not tuned in
  2. Sound produced when fast-forwarding cassette tape deck
  3. High-frequency sound generated by an oscillator, an electronic musical instrument, etc.
  4. Oscillating amplifier signals
  5. Special test signals produced by audio checking CD, etc.
  6. Sound produced when connecting or disconnecting audio connection cables (Always turn off the amplifier's power before connecting or disconnecting cables.)
  7. Howling when a microphone is used
- Do not place magnetic objects such as screwdrivers and iron parts near the tweeter since they use speakers with strong magnets. Otherwise, the objects may be attracted, causing injury or damaging the diaphragm.

Model name

Center speaker system	SKC-4700 × 1
Surround speaker system	SKM-4700 × 2

Connections

- Turn the sound volume to the minimum and disconnect the power cord from the amplifier before connecting the speaker cables.
- The nominal impedance of this speaker system is 8 Ω. Use only amplifiers capable of handling this impedance.
- Use the supplied speaker cables to connect between speaker's input terminals and the amplifier's speaker terminals as illustrated on the right.
- Connect the speaker cables securely to the terminals, with the core wires twisted properly. In this case, make sure that the core wires do not touch each other. Note that a short circuit in core wires may result in damage to the amplifier.

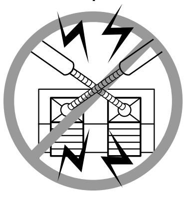

Connecting to AV amplifier

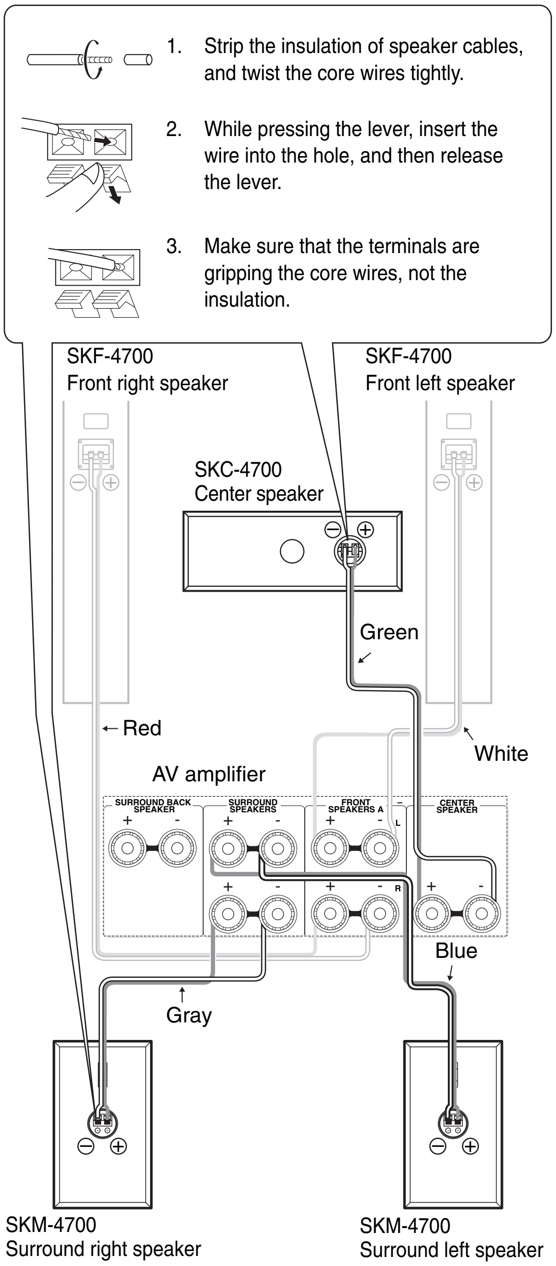

Before turning on the amplifier's power switch:

- Make sure that the positive (+) and negative (-) speaker cables do not contact each other. Otherwise, a short-circuit may occur, causing damage to the amplifier.
- Be sure to connect the speaker cables with correct polarity (connect the speaker's positive (+) and negative (-) binding posts with the amplifier's corresponding speaker terminals). Reversed polarity results in impaired bass-range reproduction, causing mislocalization of the sound image. Also, be sure to connect the Right and Left speakers with the amplifier's corresponding speaker terminals.
- Pull lightly on the speaker cables to ensure that they are connected firmly.

Placement

For better-quality sound, observe the following precautions when you install the speaker system:

- Placing the speaker system on several small-diameter supports generally results in better sound than placing it directly on a wide installation surface. Also note that high quality bass cannot be obtained if the speaker system is unstably positioned. Always use the spacers or thin metal discs (such as coins) to seat the speaker stably.
- Place the Right and Left surround speakers in similar conditions. If they are placed in extremely different conditions, left right channel balance will be adversely affected.

SKC-4700 Center Speaker

Place the SKC-4700 as close as possible to your TV set, for example, above or below the TV set. Be sure to set the SKC-4700 firmly on the TV set or other equipment so that it cannot slip and fall. This is especially important if you have small children. If the SKC-4700 is to be placed on a TV set, be sure that:

- The supporting area of the TV set is larger than that of the SKC-4700.
- The TV set's support surface is flat and level.
- The TV set is not placed on an unstable support.

SKM-4700 Surround Speaker

If the speakers are to be wall-mounted, make sure that the walls are strong enough to support the speaker's weight. The weight that mounting screws can support varies greatly depending on the wall material and the position of the reinforcing ribs embedded in the wall. Use the thickest and longest possible mounting screws with mounting screw head diameters less than 9 mm and shank diameters less than 4 mm (consult with your interior designer or contractor).

Using spacers

Affix four of the supplied spacers to the SKC-4700/SKM-4700.

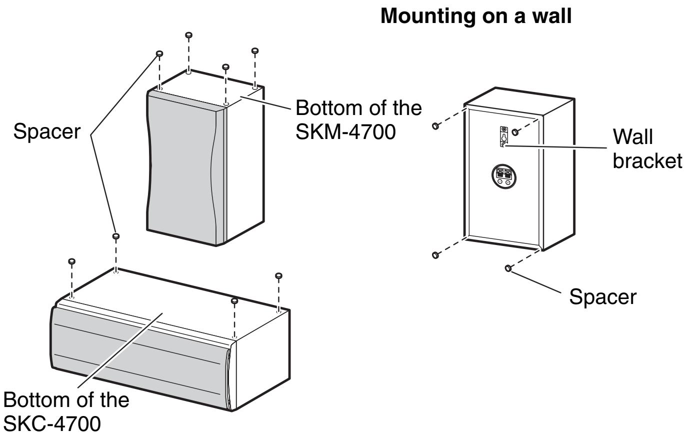

Attaching and detaching the speaker grilles (for SKC-4700 only)

The SKC-4700 uses detachable grilles. Use the following method to attach or detach the grilles.

1. While holding the long edge of the speaker grille with both hands, pull it gently toward you to remove that side of the grille.
2. In the same way, gently pull the other long edge of the speaker grille toward you to remove it from the main unit.
3. To replace the grille, push the projections at the corners into the grille plug holes on the speaker cabinet.

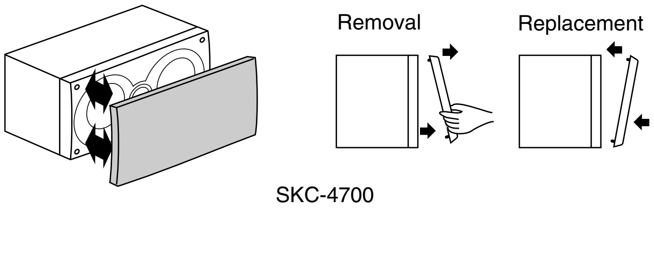

Use with a TV set

In general, Braun tubes used for color TV sets, etc. are extremely sensitive and can be affected even by the magnetism of the earth. If a speaker system is used near them, therefore, discoloration or distortion of pictures will occur. To allow use with color TV sets, etc., this speaker system is provided with magnetic shielding.
Even so, discoloration may still result, depending on the installation environment. If discoloration occurs, turn off the power of the TV set, wait for 15 to 30 minutes and then turn it on again. This activates the self-demagnetizing function of the TV set, improving the display condition. If discoloration persists even after performing this remedy, move the speaker apart from the TV set. Discoloration may also be caused when a magnet or other magnetizing object exists near the TV set because of the combined effect.

Speaker care

Your Onkyo speakers are finished with a very high quality polymer laminate covering that serves to protect the wood speaker cabinet.
Wipe the cabinet periodically with a dry, silicon-embedded or plain soft cloth.
The covering may be cleaned with a soft cloth moistened with water and a mild soap. Avoid the use of furniture polishes or harsh cleansers. Use a soft brush or hand vacuum cleaner to remove dust and lint from the grille material.

Specifications

SKC-4700

Type:	2-way bass reflex
Impedance:	8 Ω
Maximum input power:	130 W
Output sound pressure level:	89 dB/W/m
Frequency response:	60 Hz - 40 kHz
Crossover frequency:	4.5 kHz
Cabinet capacity:	11 L
Speaker (woofer):	12 cm cone x 2
Speaker (tweeter):	2.5 cm balanced dome
Dimensions:	433 (W) x 157 (H) x 194 (D) mm (Overall dimensions)
Weight:	3.9 kg
Others:	Magnetic shielding

SKM-4700

Type:	2-way bass reflex
Impedance:	8 Ω
Maximum input power:	130 W
Output sound pressure level:	81 dB/W/m
Frequency response:	50 Hz- 50 kHz
Crossover frequency:	6 kHz
Cabinet capacity:	4 L
Speaker (woofer):	10 cm cone
Speaker (tweeter):	2.5 cm balanced dome
Dimensions:	155 (W) x 266 (H) x 140 (D) mm (Overall dimensions)
Weight:	1.8 kg
Others:	Magnetic shielding
Accessory:	3 m speaker cable 9 m speaker cable x 2 Instruction manual Spacer x 12

Specifications and appearance are subject to change for improvement without prior notice.

扬声器系统

SKS-4700

使用手册

非常感谢您购买Onkyo扬声器系统。
在使用之前，请详细阅读本使用手册。
遵照本使用手册的指示和说明进行操作，将使您通过新购置的扬声器系统，得到最佳的音响效果和听觉享受。
请妥善保管本使用手册，以备将来参考。

使用本系统之前

- 本扬声器的箱体是木质的，因此，对极高（或极低）的温度和湿度非常敏感。请不要将扬声器系统放置在阳光直射之处，或多烟尘和高湿度的地方，如靠近空调机、加湿器、浴室或厨房中。否则，将会损坏扬声器。
- 请将系统放置在牢固的水平表面上。若将其放置在斜面上或放置不稳，则不仅会有扬声器系统跌落的危险，还会降低其音质。
- 在连接扬声器系统之前，请务必先关闭您的放大器。若在放大器电源打开的状况下进行连接，则可能会损坏放大器或扬声器系统。
- 请注意不要让水或其它液体溅入本系统。如果有水溅入本系统，本系统和扬声器都有可能受到损坏。

使用注意事项

- 当本扬声器系统被用来进行普通的音乐再现时，可以承受一定的输入功率。但如果下述异常信号被输入扬声器，即使其输入功率低于最大输入功率，也有可能在内部电路中产生过大的电流，使线路烧毁或损坏。
  1. 当收听调频广播未调准电台时产生的噪音
  2. 当盒式录音带快进时产生的声音
  3. 由振荡器、电声乐器等产生的高频音响
  4. 振荡的放大器信号
  5. 由音频测试CD等产生的特殊测试信号
  6. 在连接或拆除音频连接线时产生的声音（请务必在连接或拆除连接线前关闭放大器的电源）。
  7. 使用麦克风时的反馈啸声
- 请勿将螺丝刀等磁性物体和铁制物品放置在扬声器系统附近，因为它们会通过强磁场影响扬声器系统，或者，它们可能会被磁性吸至扬声器上，导致振动膜的损伤或彻底损坏。

型号名称

中心扬声器系统	SKC-4700×1
环绕声扬声器系统	SKM-4700×2

连接

- 在连接扬声器连接线之前，请先将放大器音量调至最小，并拔出放大器的电源线。
- 本扬声器系统的额定阻抗是8Ω。请只使用对应于此阻抗的放大器。
- 如右图所示，使用随机附带的扬声器连接线，连接扬声器的输入端子和放大器的扬声器端子。
- 连接扬声器连接线时，请正确地缠绕芯线，将其牢固地连接在端子上。这时，请确认芯线没有相互接触。请注意，芯线间的短路会导致放大器的损坏。

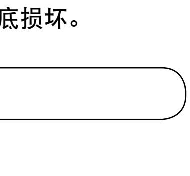

连接到 AV 放大器

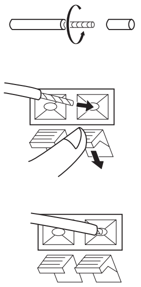

1. 剥除扬声器连接线的绝缘外层，扭紧芯线。
2. 压下端子杆，将扬声器连接线插入洞中，然后松开端子杆。
3. 确认端子接触的是芯线而非绝缘外层。

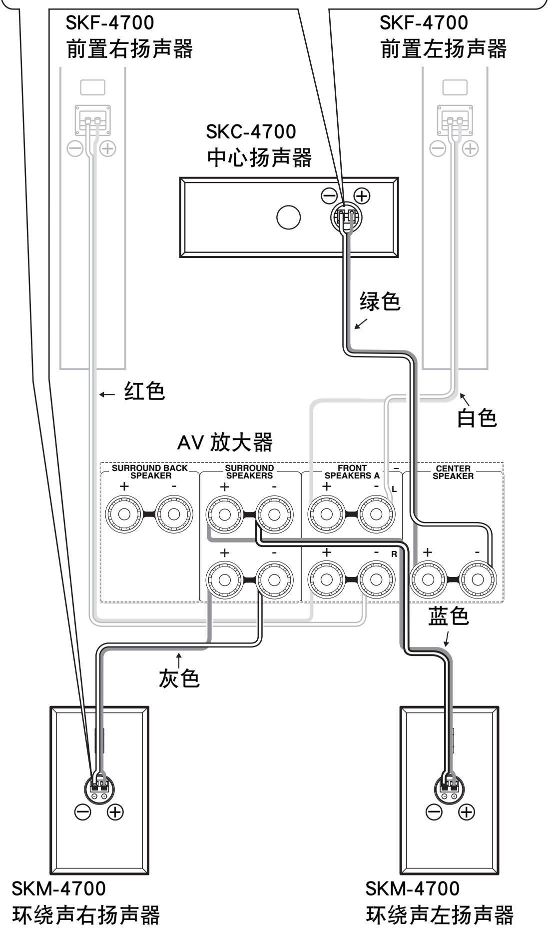

在打开放大器的电源开关之前：

- 确认扬声器连接线的正极(+)和负极(-)没有相互接触。否则可能会发生短路，导致放大器的损坏。
- 在连接扬声器连接线时，一定要保证极性的正确。（将扬声器的正(+)和负(-)接线柱连接至放大器上相应的扬声器端子。）极性接反将会阻碍低音的再现，并导致声场不能正确定位。同时，请务必使左侧和右侧的两个扬声器与放大器上相应的扬声器端子正确地连接。
- 轻拉扬声器连接线，以确认其已牢固地连接。

安放

为了获得最佳的音质，在安装扬声器系统时请遵守下列注意事项。

- 与直接安放在平面上相比，将扬声器系统安放在几个支脚上能获得更佳的音响效果。另外，如果扬声器系统放置不平，则无法获得优质的低音效果。请务必使用薄软木片或金属（如硬币）将扬声器垫平。
- 将左侧和右侧的扬声器安放在相近状态下。如果它们安放的状态截然不同，则将对左声道和右声道的平衡带来不良影响。

SKC-4700中心扬声器

请将SKC-4700尽量靠近电视机，比如放在电视机之上或之下。务必将SKC-4700稳固地放在电视机或其他设备之上，使其不会滑落。家有小孩时这一点尤其重要。如果将SKC-4700放在电视机之上，请确保：

- 电视机的支撑面积大于SKC-4700。
- 电视机的支撑面平整且水平。
- 电视机放在平稳的支撑面上。

SKM-4700环绕声扬声器

如果要将扬声器安装在墙壁上，墙壁的强度必须足够支撑扬声器的重量。视墙壁材质和加固肋嵌入墙壁的位置不同，安装螺丝可支撑的重量有很大差异。请尽量使用最粗最坚固的安装螺丝，螺丝头直径需小于9 mm，螺丝杆直径需小于4 mm（请咨询您的室内设计师或承包人）。

使用调整垫

将随附的4个调整垫固定到SKC-4700/SKM-4700。

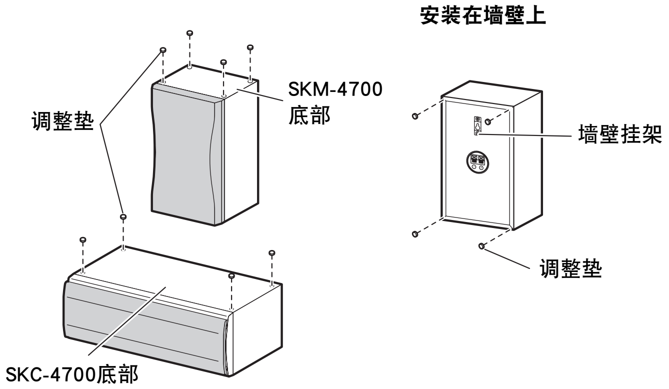

扬声器前格板的安装和拆除（仅适用于 SKC-4700）

SKC-4700使用可拆式前格板。安装和拆除的方法如下。

1. 用两手抓住扬声器前格板的底边，轻轻向外拉，将前格板的下部拆开。
2. 用同样的方法，轻轻向外拉前格板的上边，将前格板从箱体上拆下。
3. 装回前格板时，将突起部推入扬声器箱体的前格板安装插孔。

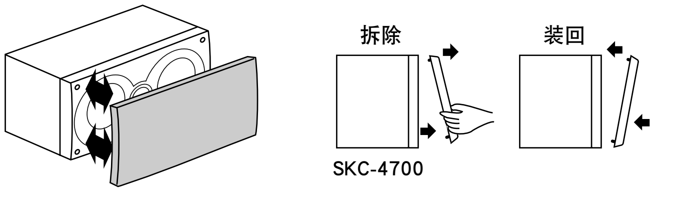

作为电视机的外接扬声器使用时

通常，应用于彩色电视机等的阴极射线管是极为敏感的，它们甚至会受到地球磁场的影响。如果扬声器系统靠近它们，则会产生色调混乱或图像失真。为了能够和彩色电视机等同时使用，本扬声器系统进行了磁场屏蔽。

但是，即使进行了屏蔽，根据安装的环境，也有可能发生色调混乱。如果出现色调混乱，请关闭电视机的电源，等待15至30分钟，然后再次打开电视机电源。这将启动电视机的自动消磁功能，改善显示状况。如果在进行这种补救措施后仍有色调混乱，请将扬声器离开电视机远一些。由于综合影响，当一块磁铁或其它磁性物体放置在电视机附近时，也有可能出现色调混乱现象。

扬声器的维护

您的Onkyo扬声器表面覆盖了一层高质量的聚合物薄膜，以保护木质的箱体。请定期用一块干燥的软硅布或普通软布擦拭机体。

其表面可以用软布蘸清水来擦拭，可以使用刺激性不强的肥皂。请不要使用家具抛光剂或去污粉。请用软刷或手持型吸尘器去除沾在前格板上的灰尘和绒毛。

规格

SKC-4700

型式:	双路低音反射
阻抗:	8 Ω
最大输入功率:	130 W
输出声压电平:	89 dB/W/m
频率响应:	60 Hz-40 kHz
交叉频率:	4.5 kHz
箱体容积:	11 L
低音扬声器:	12 cm 锥型扬声器 ×2
高音扬声器:	2.5 cm 平衡圆顶型扬声器
尺寸:	433（宽）×157（高）×194（深）mm （包括扬声器前格板）
重量:	3.9 kg
其它:	磁场屏蔽

SKM-4700

型式:	双路低音反射
阻抗:	8 Ω
最大输入功率:	130 W
输出声压电平:	81 dB/W/m
频率响应:	50 Hz-50 kHz
交叉频率:	6 kHz
箱体容积:	4 L
低音扬声器:	10 cm 锥型扬声器
高音扬声器:	2.5 cm 平衡圆顶型扬声器
尺寸:	155（宽）×266（高）×140（深）mm （包括扬声器前格板）
重量:	1.8 kg
其它:	磁场屏蔽
附件:	3 m 扬声器连接线 9 m 扬声器连接线 ×2 使用手册 调整垫 ×12

规格和外形如有变更，恕不另行通知。

ONKYO CORPORATION
Sales & Product Planning Div. : 2-1, Nisshin-cho, Neyagawa-shi, OSAKA 572-8540, JAPAN
Tel: 072-831-8023 Fax: 072-831-8124

ONKYO U.S.A. CORPORATION
18 Park Way, Upper Saddle River, N.J. 07458, U.S.A.
Tel: 201-785-2600 Fax: 201-785-2650 http://www.us.onkyo.com/

ONKYO EUROPE ELECTRONICS GmbH
Liegnitzerstrasse 6, 82194 Groebenzell, GERMANY
Tel: +49-8142-4401-0 Fax: +49-8142-4401-555 http://www.eu.onkyo.com/

ONKYO EUROPE UK Office
Suite 1, Gregories Court, Gregories Road, Beaconsfield, Buckinghamshire, HP9 1HQ
UNITED KINGDOM Tel: +44-(0)1494-681515 Fax: +44(0)-1494-680452

ONKYO CHINA LIMITED
Unit 1&12, 9/F, Ever Gain PlazaTower 1, 88, Container Port Road, Kwai Chung,
N.T., HONG KONG Tel: 852-2429-3118 Fax: 852-2428-9039
http://www.ch.onkyo.com/

ONKYO HOMEPAGE
http://www.onkyo.com/

SN 29344553
(C) Copyright 2007 ONKYO CORPORATION Japan. All rights reserved.

Printed in Japan
N0707-1